SWITCHCRAFT, INC. 5555 N. Elston Ave.
Chicago, IL 60630 • 773 792-2700 • FAX: 773 792-2129
www.switchcraft.com

LEVER SWITCHES
KNOBS

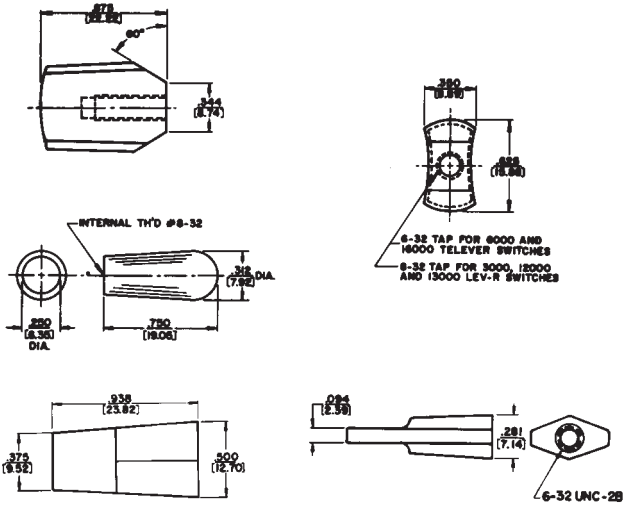

DIMENSIONS ARE FOR REFERENCE ONLY Inch / (mm)