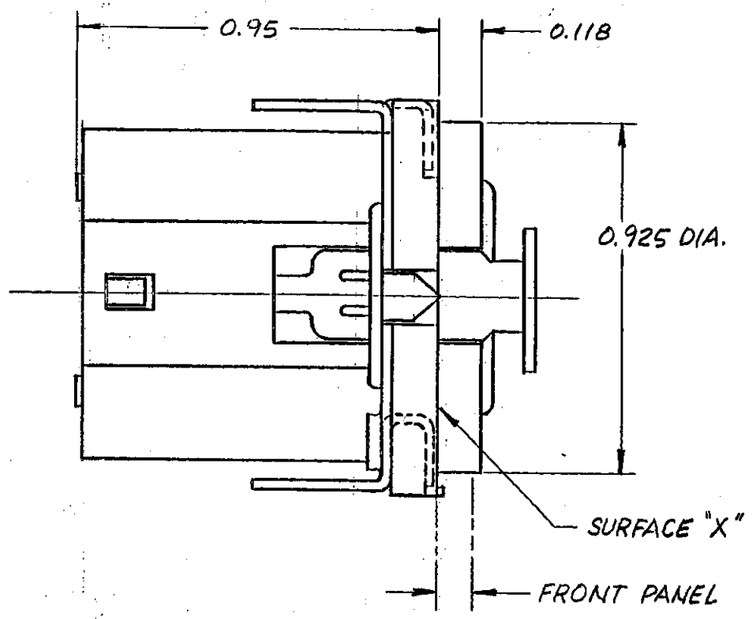

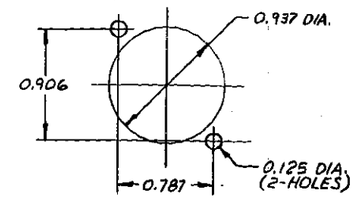

PANEL OPENING

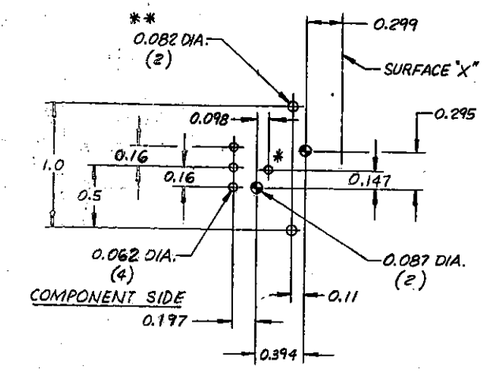

* NOT USED WHEN GROUND TERMINAL NOT USED.

** 2-HOLES NOT USED WHEN MOUNTING BRACKET SNAP-IN TERMINAL NOT USED.

RECOMMEND PC BOARD LAYOUT (RIGHT ANGLE)

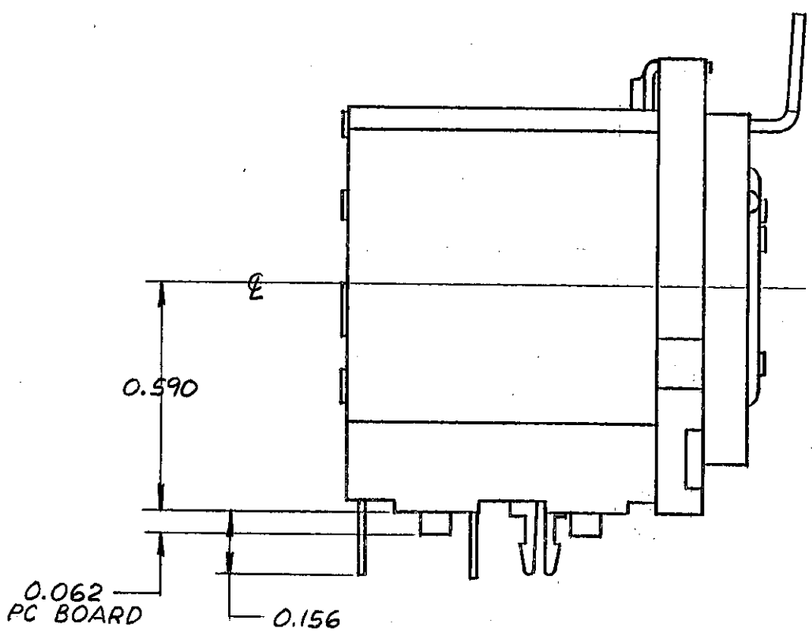

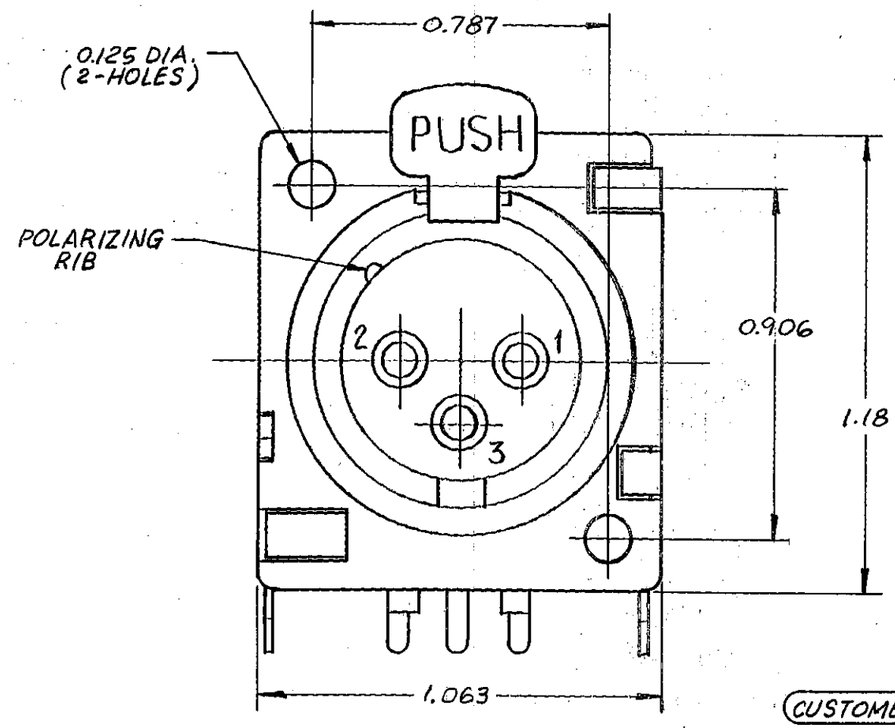

CUSTOMER DRAWING

NOTE:

1. ALL DIMENSIONS REFERENCE UNLESS OTHERWISE SPECIFIED.

MATERIALS:

HOUSING - BLACK MOLDED THERMOPLASTIC, GLASS FILLED

GROUND PIN - PHOSPHOR BRONZE, ELECTROTIN PLATED

CONTACTS - BRASS, GOLD PLATED

GROUND PLATE - NICKEL SILVER, ELECTROTIN PLATED

ISSUE	CHANGE NO.	DATE	BY	APP'D
A	FIRST DRAWN ECO # 19316	5MAY95	RC	BMD

REVISIONS

☆ STAR SYMBOL DENOTES CRITICAL DIMENSION. SEE S/C ENGINEERING STANDARD ES-3001

UNLESS OTHERWISE SPECIFIED

1. ALL DIMENSIONS IN INCHES
2. DECIMAL DIMENSIONS ±.005
3. FRACTIONAL DIMENSIONS ±1/64
4. ANGLES ±1/2°
5. ALL DIA'S CONCENTRIC WITHIN .005 T.I.R.
6. REMOVE ALL BURRS
7. MAKE NO DIMENSIONAL ALLOWANCES FOR APPLIED FINISHES, I.E.: PLATING, PAINTING, ETC.
8. HOLES ON THE SAME CENTERLINE MUST BE ALIGNED WITHIN ±.002

DO NOT SCALE DRAWING

THIS DRAWING DESCRIBES A DESIGN CONSIDERED PROPRIETARY IN NATURE, DEVELOPED AND MANUFACTURED BY SWITCHCRAFT INC. AND IS RELEASED ON A CONFIDENTIAL BASIS FOR IDENTIFICATION PURPOSE ONLY.

SIZE	WIDTH	HOLY	LBS./M	TEMPER

FINISH: | MATERIAL:

SPEC. NO.: | SPEC. NO.:

FIRST USED ON: | SCALE: ☆

DATE DRAWN	BY	CHK'D	APP'D
5MAY95	RC	RC	BMD 5-11-95

Switchcraft®

NAME: CONNECTOR ASS'Y. FEMALE (R.A. MOUNT)

PART NO.: PQG3FRA112AU | ISSUE: A

ROUTING