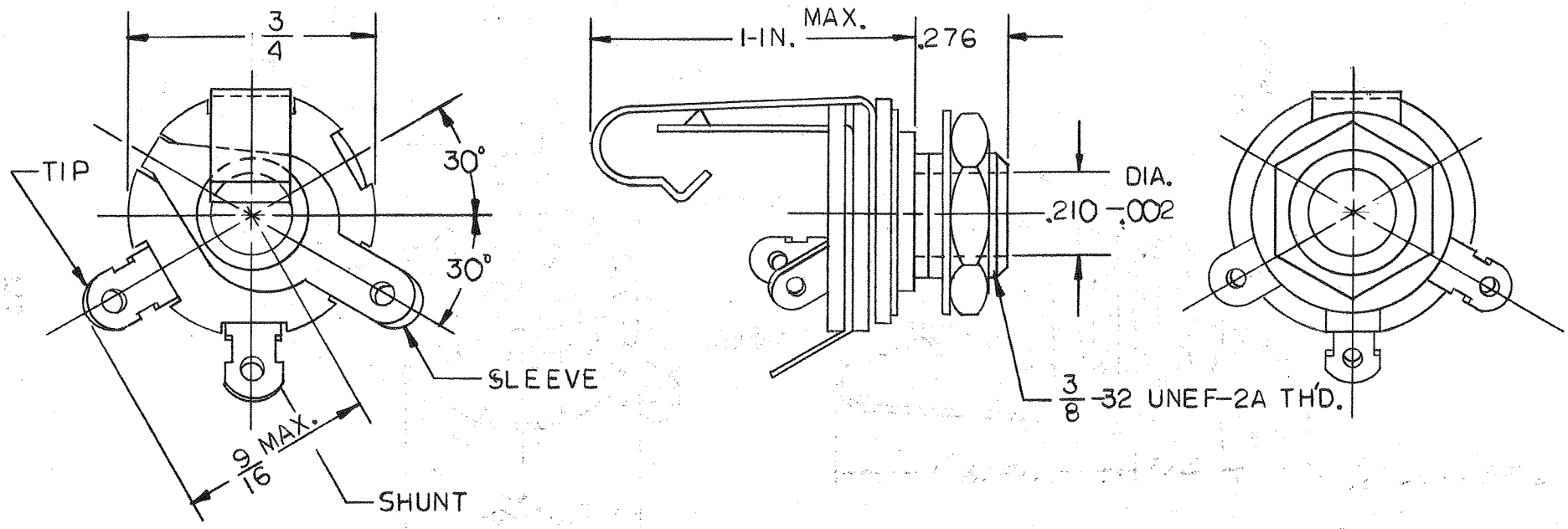


| ☆ STAR SYMBOL DENOTES CRITICAL DIMENSION, SEE S/C ENGINEERING STANDARD ES-0001. | SIZE | WIDTH | MULT. | LBS. PER M | TEMPER |
|---|---|---|---|---|---|

THIS DRAWING DESCRIBES A DESIGN CONSIDERED PROPRIETARY IN NATURE, DEVELOPED AND MANUFACTURED BY SWITCHCRAFT, INC., AND IS RELEASED ON A CONFIDENTIAL BASIS FOR IDENTIFICATION PURPOSE ONLY.

| ISS | SYM | REVISION | BY | DATE |
|---|---|---|---|---|
| B | | ECO*20627 | KS | 8-7-96 |

UNLESS OTHERWISE SPECIFIED:

1 - DECIMAL DIMENSIONS ± .005
2 - FRACTIONAL DIMENSIONS ± 1/64
3 - ANGLES ± 1/2°
4 - ALL DIA'S CONCENTRIC WITHIN .005 T.I.R.
5 - ALL DIMENSIONS IN INCHES
6 - FOR THREADS USE UNIFIED PLUG AND RING GAGES ONLY.
7 - REMOVE ALL BURRS.
8 - PART TO BE FABRICATED AS SPECIFIED. MAKE NO DIMENSIONAL ALLOWANCES FOR APPLIED FINISHES, I.E., PLATING, PAINTING, ETC.
9 - HOLES ON SAME CENTERLINE MUST BE ALIGNED WITHIN ± .002

DO NOT SCALE DRAWING

| | | |
|---|---|---|
| DRAWN BY H CJ | DATE 11-18-75 | FINISH |
| CHECKED BY J.S. | DATE 11-18-75 | PER FINISH SPEC. NO. |
| APPROVED BY | DATE | MATERIAL |
| SCALE | | PER MAT. SPEC. NO. |
| FIRST USED ON | | SWITCHCRAFT |
| NAME LITTEL JAX | PART NO. S-12A | ISSUE B |
| | SHEET OF | |

ROUTING (5) (12) (46)

PAXTON