PART NO. C240

MATERIALS:

TIP & BODY - BRASS, NICKEL PLATE

TERMINALS - BRASS, TIN PLATE

INSULATORS - PHENOLIC

HANDLE - BLACK MOLDED PLASTIC

SCREWS - BRASS, NICKEL PLATE

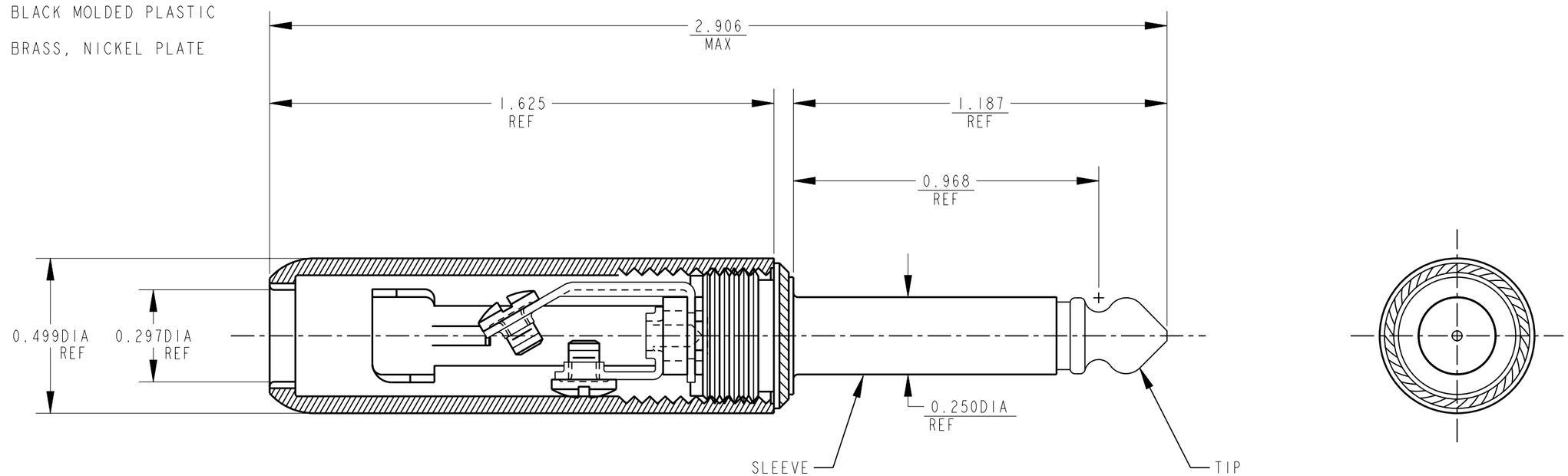

CUSTOMER DRAWING

CAD/CAM DWG. NO.

C240_CD

SHEET 1 OF 1

ISSUE	CHANGE NO.	DATE	BY	APP'D
B	ECO #20627	1-25-96	DEA	TAO
A	FIRST DRAWN ECO #19530	1-18-95	ES	GHJ

REVISIONS

☆ STAR SYMBOL DENOTES CRITICAL DIMENSION, SEE S/C ENGINEERING STANDARD ES-0001

UNLESS OTHERWISE SPECIFIED

1. ALL DIMENSIONS IN INCHES
   TWO PLACE DECIMAL ±.01
   THREE PLACE DECIMAL ±.005
   FRACTIONAL DIMENSIONS ±1/64
   ANGLES ±1/2°
   ALL DIA'S CONCENTRIC WITHIN .005 T.I.R.
2. REMOVE ALL BURRS
3. MAKE NO DIMENSIONAL ALLOWANCES FOR APPLIED FINISHES, I.E., PLATING, PAINTING, ETC.
4. HOLES ON THE SAME CENTERLINE MUST BE ALIGNED WITHIN ±.002

DO NOT SCALE DRAWING

THIS DRAWING DESCRIBES A DESIGN CONSIDERED PROPRIETARY IN NATURE, DEVELOPED AND MANUFACTURED BY SWITCHCRAFT INC. AND IS RELEASED ON A CONFIDENTIAL BASIS FOR IDENTIFICATION PURPOSE ONLY.

SIZE	WIDTH	MULT	LBS./M	TEMPER
.	.	.	.	.

FINISH .
SPEC. NO. .

MATERIAL .
SPEC. NO. .

FIRST USED ON .

SCALE 1 = 0.375

DATE DRAWN	BY	CHK'D	APP'D
1-18-95	ES	BMD 1-24-95	GHJ 1-24-95

Switchcraft®

NAME 2 CONDUCTOR LITTLE PLUG

PART NO. C240

ISSUE B

Pro/Engineer CAD File

B

ROUTING