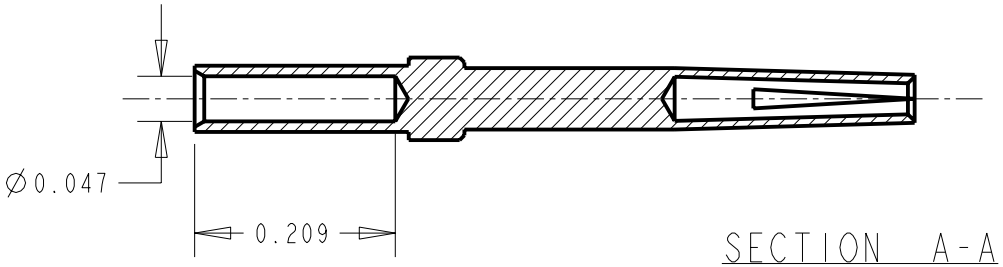

SECTION A-A

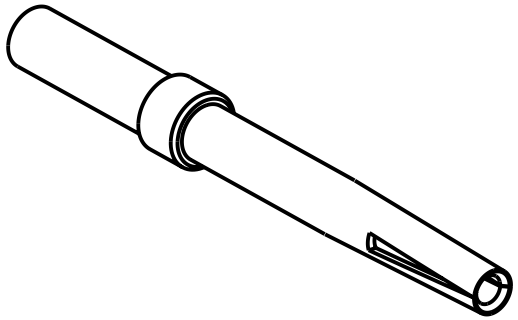

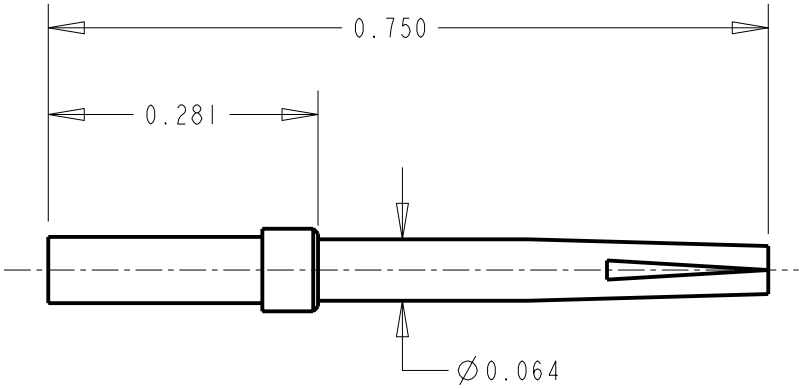

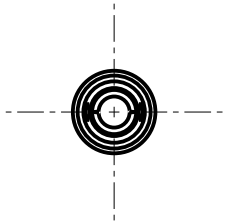

MATERIAL: COPPER BASE ALLOY
GOLD PLATED OVER
NICKEL UNDERPLATE.

NOTE:
1. ALL DIMENSIONS ARE FOR REFERENCE ONLY.

CUSTOMER DRAWING

REV	ECO NUMBER	DATE	BY	APVD
A	ECO #21001	10-1-96	MM	RB

REVISIONS

☆ STAR SYMBOL DENOTES CRITICAL DIMENSION

UNLESS OTHERWISE SPECIFIED

1. ALL DIMENSIONS IN INCHES
   - TWO PLACE DECIMALS ±0.01
   - THREE PLACE DECIMALS ±0.005
   - FRACTIONAL DIMENSIONS ±1/64
   - ANGLES ±1°
   - ALL DIA. CONCENTRIC WITHIN 0.005 T.I.R.
2. FEATURES ON THE SAME CENTERLINE MUST BE ALIGNED WITHIN ±0.002
3. REMOVE ALL BURRS

DO NOT SCALE DRAWING

THIS DRAWING DESCRIBES A DESIGN CONSIDERED PROPRIETARY IN NATURE, DEVELOPED AND MANUFACTURED BY SWITCHCRAFT INC. AND IS RELEASED ON A CONFIDENTIAL BASIS FOR IDENTIFICATION PURPOSES ONLY.

SIZE	WIDTH	MULT	LBS/M	TEMPER
.	.	. .	.	.

FINISH .
SPEC No. .

MATERIAL .
SPEC No. .

FIRST USED ON	SCALE
.	5:1

DATE DRAWN	BY	CHKD	APVD
1-OCT-96	MM	RB 10-1-96	RB 10-1-96

Switchcraft®

SHEET 1 OF 1

NAME
#20 CRIMP CONTACT, FEMALE

PART No. EN3CC20F

REV A

Pro/Engineer CAD File

A

ROUTING 146 112