PART NO. P1717

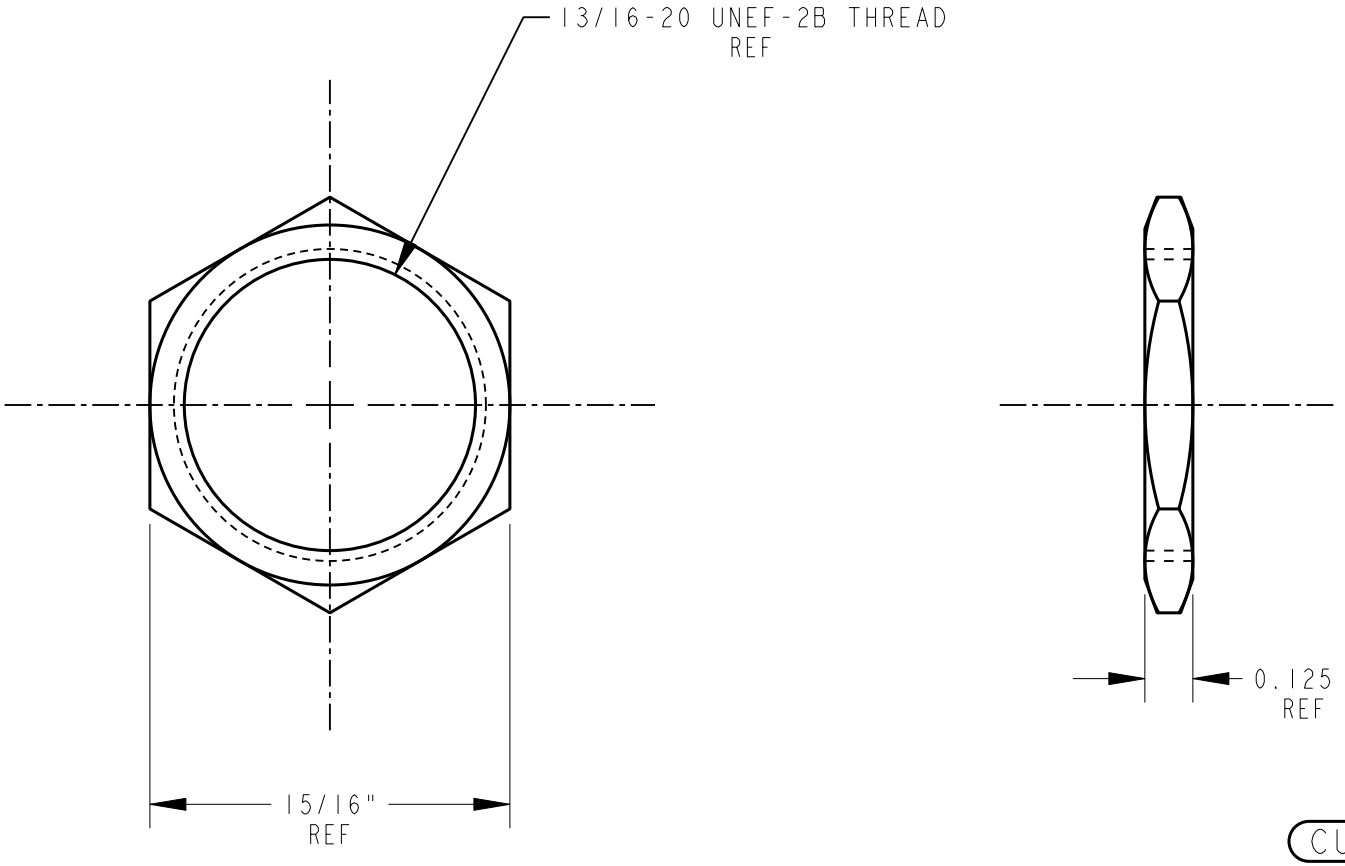

MATERIAL: BRASS

FINISH: NICKEL PLATED

CUSTOMER DRAWING

CAD/CAM DWG. NO.
P1717_CD

SHEET 1 OF 1

ISSUE	CHANGE NO.	DATE	BY	APP'D
A	FIRST DRAWN	4-28-93	LR	GHJ

REVISIONS

☆ STAR SYMBOL DENOTES CRITICAL DIMENSION, SEE S/C ENGINEERING STANDARD ES-0001

UNLESS OTHERWISE SPECIFIED

1. ALL DIMENSIONS IN INCHES
2. DECIMAL DIMENSIONS ±.005
3. FRACTIONAL DIMENSIONS ±1/64
4. ANGLES ±1/2°
5. ALL DIA'S CONCENTRIC WITHIN .005 T.I.R.
6. REMOVE ALL BURRS
7. MAKE NO DIMENSIONAL ALLOWANCES FOR APPLIED FINISHES, I.E., PLATING, PAINTING, ETC.
8. HOLES ON THE SAME CENTERLINE MUST BE ALIGNED WITHIN ±.002

DO NOT SCALE DRAWING

THIS DRAWING DESCRIBES A DESIGN CONSIDERED PROPRIETARY IN NATURE, DEVELOPED AND MANUFACTURED BY SWITCHCRAFT INC. AND IS RELEASED ON A CONFIDENTIAL BASIS FOR IDENTIFICATION PURPOSE ONLY.

SIZE	WIDTH	MULT	LBS./M	TEMPER

FINISH
SPEC. NO.

MATERIAL
SPEC. NO.

FIRST USED ON
.

SCALE
1 = 0.5

DATE DRAWN	BY	CHK'D	APP'D
4-28-93	LR	JB 4-29-93	GHJ 4-29-93

Switchcraft®

NAME
JAM NUT

PART NO.
P1717

ISSUE
A

Pro/Engineer CAD File

AH

ROUTING